FOG TITE INCORPORATED

# TRAFFIC BEARING TYPE 5 & 6

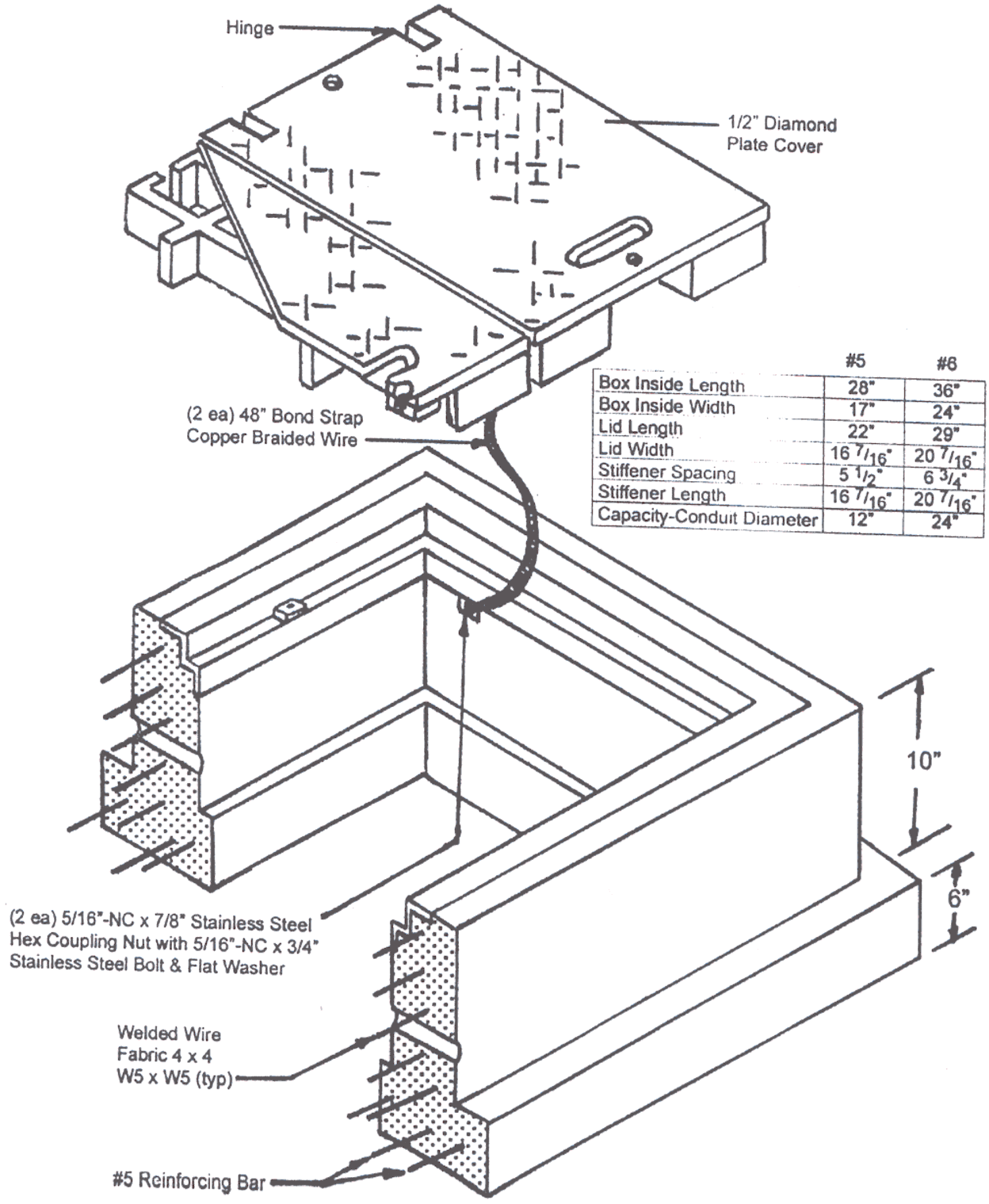


| | #5 | #6 |
|---|---|---|
| Box Inside Length | 28" | 36" |
| Box Inside Width | 17" | 24" |
| Lid Length | 22" | 29" |
| Lid Width | 16 7/16" | 20 7/16" |
| Stiffener Spacing | 5 1/2" | 6 3/4" |
| Stiffener Length | 16 7/16" | 20 7/16" |
| Capacity-Conduit Diameter | 12" | 24" |